■HVR 系列铝电解电容器
HVR Series Aluminum Electrolytic Capacitor



◆特征
Feature

* 寿命: 125℃ 4000 小时
  Load life:125℃ 4000 hours.
* 符合 RoHS
  Compliant to the RoHS Directive.
* 符合 AEC-Q200
  Compliant to the AEC-Q200 Directive.

◆应用
Application

* 适用于汽车模块电子产品
  Ideally suited for switching power supplies, telecommunication and other electronic products.
* 适用于自动表面贴装技术和高密度电路
  Ideally suited for automatic SMT and high density circuits.

◆型号表示法
Part Number

8	220	LF	M	AA07	HR	F	R	0	B	Q

代码 Code	产品类别 Type
8	成品 Product

代码 Code	电压 Voltage
LC	16
LD	25
LE	35
LF	50
LG	63
LH	80

代码 Code	尺寸 Dimensions ΦDxL(mm)
AA06	Φ6.3x5.8
AA07	Φ6.3x7.7
0810	Φ8x10.5
1010	Φ10x10.5
1012	Φ10x12.5

代码 Code	商标 Trademark
0	无商标
F	FH

代码 Code	内码 Internal Code
0	无印刷温度品，贴片、闪光灯品，

代码 Code	产品脚型 Lead Forming Type
0	散装品 Bulk
Q	胶盘包装 Tape and Reel Packaging

代码 Code	标称容量 Nominal Capacitance
220	22μF
470	47μF
101	100μF
471	470μF
681	680μF

代码 Code	误差 Tolerance
K	±10%
V	$\pm^{20}_{10}$ %
M	±20%
A	特殊

代码 Code	型号 Series
HR	HVR

代码 Code	印字颜色 Marking Color
R	红色 RED

代码 Code	内码 Internal Code
B	汽车电子 Automotive electronics

◆产品结构
Product Structure

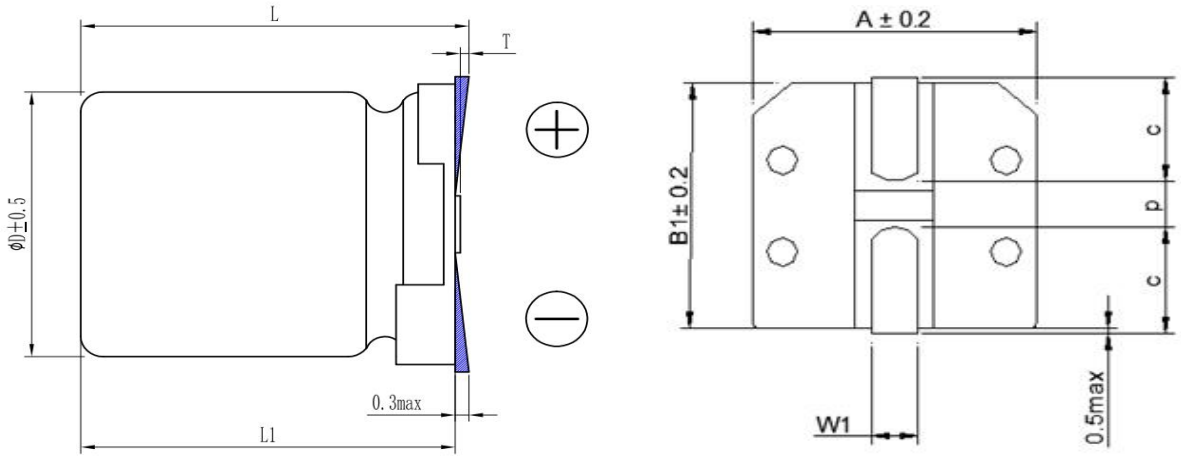

ΦD±0.5	L	A±0.2	B_1±0.2	C±0.2	W_1	P±0.2
6.3	5.8±0.3	6.6	6.6	2.5	0.5~0.8	2.0
6.3	7.7±0.3	6.6	6.6	2.5	0.5~0.8	2.0
8	10.5±0.5	8.3	8.3	2.9	0.7~1.1	3.1
10	10.5±0.5	10.3	10.3	3.2	0.7~1.3	4.7
10	12.5±0.5	10.3	10.3	3.2	0.7~1.3	4.7

◆主要特性表
Main specifications

<table>
<tr><th>项目 Item</th><th>主要特性 Performance Characteristics</th></tr>
<tr><td>额定工作电压范围
Rated Voltage Range</td><td>16~80V.DC</td></tr>
<tr><td>使用温度范围
Operating Temperature Range</td><td>-55℃~+125℃</td></tr>
<tr><td>标称静电容量范围
Nominal Capacitance Range</td><td>22~220μF</td></tr>
<tr><td>静电容量允许偏差
Capacitance Tolerance</td><td>±20%（M，+20℃，120Hz）</td></tr>
<tr><td>漏电流
Leakage Current (20℃)</td><td>
<table>
<tr><td>额定工作电压(V)
Rated working voltage</td><td>16~80</td></tr>
<tr><td>漏电流
Leakage current</td><td>2 分钟后 I≤0.01CV 或 10μA，取较大值
After 2 min, I≤0.01CV or 10μA, whichever is greater.</td></tr>
</table>
C：标称静电容量（μF）Nominal Capacitance in μF
V：额定工作电压（V）Rated working voltage in V
</td></tr>
<tr><td>损耗角正切值
Dissipation Factor</td><td>
<table>
<tr><td>额定工作电压(V)
Rated working voltage</td><td>16</td><td>25</td><td>35</td><td>50</td><td>63</td><td>80</td></tr>
<tr><td>DF(MAX)
(20℃,120Hz)</td><td>0.16</td><td>0.14</td><td>0.12</td><td>0.10</td><td>0.08</td><td>0.08</td></tr>
</table>
</td></tr>
</table>

浪涌电压 Surge Voltage

额定工作电压(V) Rated working voltage	16	25	35	50	63	80
浪涌电压 Surge voltage (V)	18.4	28.8	40.3	57.5	72.5	92

施加表中所列浪涌电压，充电 30±5 秒，放电 5.5±0.5 分钟作为一个周期，共进行 1000 次。测试温度：15℃-35℃。然后在标准大气条件下放置达到热稳定，测试各参数。

Application of DC surge Voltage stated at table,1000 times of charging for 30±5 sec., discharging with a period of 5.5±0.5 min. Test temperature: 15℃-35℃ And the capacitor shall be stored under standard atmospheric conditions to obtain thermal stability, after which measurements shall be made.

容量变化：在初始值的±30%以内。

Capacitance change: Within ± 30% of the initial value

损耗角正切值：≤200%不大于规定值。

Dissipation factor: Not more than 200% of the specified value.

ESR：≤200%不大于规定值。

ESR: Not more than 200% of the specified value.

漏电流：不大于规定值。

Leakage current: Not more than the specified value

温度特性 Temperature Characteristic

电容器根据下表的次序处理，放置在每一温度下，待阻抗或电容量稳定后方可测试。

The capacitor shall be subjected in turn to the procedures specified below. The capacitor should be stored at each temperature until measured impedance or capacitance are stabilized.

阶段 Step	温度 Temperature	时间 Time
1	20±2℃	热平衡状态 Thermal balance
2	-55±2℃	2 hours
3	20±2℃	热平衡状态 Thermal balance
4	125±2℃	2 hours
5	20±2℃	热平衡状态 Thermal balance

阶段 1：测定容量，损耗和阻抗值。

Step 1: Capacitance, Dissipation Factor and impedance shall be measured.

阶段 2：放置 2 小时后，达到热平衡状态再测定容量，损耗和阻抗值。

Step 2: After the capacitor being stored for 2 hours, Capacitance, Dissipation Factor and impedance shall be Measured. The measurement shall be made at thermal stability.

阶段 4：放置 2 小时后，达到热平衡状态再测定容量，损耗和阻抗值。

Step 4: After the capacitor being stored for 2 hours, Capacitance, Dissipation Factor and impedance shall be Measured. The measurement shall be made at thermal stability.

阶段 2：阻抗比 Step 2: Impedance ratio

额定工作电压(V) Rated working voltage		16~80
阻抗比(100kHz) Impedance Ratio	Z(-25℃)/Z(+20℃)	1.5
	Z(-55℃)/Z(+20℃)	2.0

静电容量变化率：阶段 1 的±30% Capacitance change: within ±30% of step 1

阶段 4 (Step 4)：漏电流：规定值 5 倍以下 Leakage Current: Less than 500% of specified value.

高温负荷 High Temperature Operating Life	试验温度：125±2℃,施加额定电压和额定纹波电流 试验时间：4000 小时 Test temperature:125±2℃, Application of the rated voltage and rated ripple current. Test time: 4000h 外观：无异状 Appearance: No remarkable abnormality 容量变化：在初始值±30%范围内 Capacitance change: Within ±30% of the initial value 损耗角正切值：≤200%规定值 Dissipation factor: ≤200% of the specified value ESR：≤200%规定值 ESR: ≤200% of the specified value 漏电流：不大于规定值 Leakage current: ≤specified value
高温贮存 High Temperature Exposure (Storage)	试验温度：125±2℃环境下无负荷贮存 试验时间：1000 小时 Test temperature: without voltage load at 125±2℃ Test time : 1000h 外观：无异状 Appearance: No remarkable abnormality 容量变化：在初始值±30%范围内 Capacitance change: Within ±30% of the initial value. 损耗角正切值：≤200%规定值 Dissipation factor: ≤200% of the specified value ESR：≤200%规定值 ESR: ≤200% of the specified value 漏电流：≤规定值 Leakage current: ≤specified value
温度循环 Temperature Cycling	试验温度：高温：上限类别温度、低温：下限类别温度；高低温暴露时间：各 30 分钟； 转换时间：小于 1 分钟；循环次数：1000 次；试验结束后（24±4）小时内进行测试。 Expose to the upper and lower category temperatures for 30 minutes each, with a transition time of less than 1 minute between high and low temperatures, and cycle 1000 times. The test shall be conducted within 24±4 hours after the end of the experiment. 外观：无可见损伤和电解质漏出 Appearance: No remarkable damage and electrolyte leakage 容量变化：在初始值±30%范围内 Capacitance change: Within ±30% of the initial value. 损耗角正切值：≤200% 规定值 Dissipation factor: ≤200% of the specified value ESR：≤200%规定值 ESR: ≤200% of the specified value 漏电流：不大于规定值　Leakage current: ≤specified value

耐焊接热 Resistance To Soldering Heat	回流焊温度曲线 Return to normal temperature and measure it after reflow in the condition

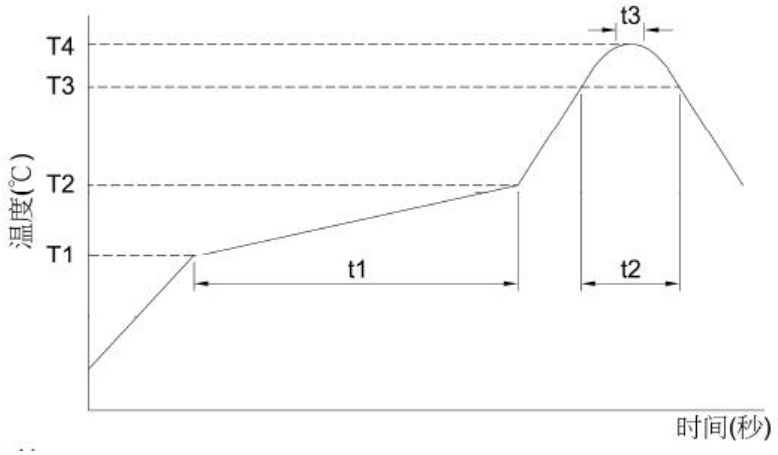

温度 temperature (T1~T2,°C)	150~180		
时间 time (t1，s)	120		
温度 temperature (T3,°C)	200	217	230
时间 time (t2，s)	70	50	40
温度 temperature (T4,°C)	250		260
时间 time (t3，s)	5		
回流焊次数 The number of reflow	2		1

1) 电容器表面温度不超过 T4(℃)。
2) 电容器表面温度超过 T3 的时间分别不得超过 t2 秒。
3) 预热应在 100℃~180℃之间进行，最长时间为 180 秒。
4) 第 1 次回流之后，必须确保电容器的温度已经完全冷却到室温（5 ～35℃）后方可进行第 2 次回流。

1) Temperature at surface of the capacitor shall not exceed T4(℃).
2) Period that temperature at surface of the capacitor becomes more than T3 shall not exceed t2.
3) Preheat shall be made at 100℃~180℃ and for maximum 180 seconds.
4) Please ensure that the capacitor became cold enough to the room temperature (5 to 35℃) before the second reflow.

外观：无异状
Appearance: No remarkable abnormality
容量：规定公差范围内
Capacitance value: Within the specified tolerance range.
损耗角正切值：不大于规定值
Dissipation factor: ≤ specified value
ESR：不大于规定值
ESR: ≤ specified value
漏电流：不大于规定值
Leakage current: ≤specified value

耐溶剂性 Solvent Resistance	三种溶剂： 溶剂 a、在 20℃~30℃按下述配方构成混合溶剂：1）一份体积的分析纯异丙醇；2）三份体积的 80%体积的煤油和 20%体积的乙苯构成的混合液； 溶剂 b、三氯三氟乙烷，半水溶性的溶剂； 溶剂 c、在 63℃~70℃，按下述配方构成混合溶剂；1）42 份体积的去离子水； 2）一份体积的乙二醇-丁醚；3）一份体积的单乙醇胺； 将样品分成 3 组，分别浸在 a、b、c 三种溶剂 3min 后擦拭 10 次；擦拭后，立即按上述方法再重复 2 回，浸、刷共 3 回。然后用水洗清洗剂进行清洗，并在室温下对整个表面进行通风干燥。 The solvent solutions used in this test shall consist of the following: Solvent a: A mixture consisting of the following at 20˚C~30˚C: 1) One part by volume of isopropyl alcohol. 2) Three parts by volume of a mixture of 80% by volume of kerosene and 20% by volume ethyl benzene. Solvent b: Trichlorotrifluoroethane, semi water-soluble solvents. Solvent c: A mixture consisting of the following at 63˚C~70˚C: 1) Forty-two parts by volume of deionized water. 2) One part by volume of ethylene glycol butyl ether. 3) One part by volume of monoethanolamine. The specimens subjected to this test shall be divided into three groups of approximately equal size, were immersed in a, b, c three solvents solutions. The specimens shall be completely immersed for 3 minutes, immediately following immersing, each specimen shall be tested as follows: The bristle portion of the brush, shall be dipped in the solution until wetted and the specimen shall be brushed with normal hand pressure (approximately 2 to 3 ounce applied normal to the surface) for ten strokes on the portion of the specimen where has been applied. The brush stroke shall be directed in a forward direction across the surface of the specimen being tested. Immediately after brushing, the procedure shall be repeated two more times, for a total of three immersions, followed by brushing. After completion of the third immersion and brushing, the specimens shall be rinsed in approximately 25℃ water and all surfaces sir-blown dry. 外观：无异状 Appearance: No remarkable abnormality 容量变化：在初始值±3%范围内 Capacitance change: Within ±3% of the initial value. 损耗角正切值：不大于规定值 Dissipation factor: ≤ specified value ESR：不大于规定值 ESR: ≤ specified value 漏电流：不大于规定值 Leakage current: ≤ specified value

可焊性 Solderability	温度：235±5℃ Temperature : 235±5℃ 时间：3±0.3s Duration : 3±0.3s 焊料:25wt%的松香/乙醇 Flux: About 25 wt.% Rosin/Ethanol 浸入焊锡的引线表面积约 95%以上应附着新锡。 At least 95% of circumferential surface of the dipping portion of terminal shall be covered with new solder.
高温高湿 Biased Humidity	试验电压：额定电压 Test voltage: rated voltage 试验温湿度：85℃，85%RH Test temperature and humidity : 85℃，85%RH 试验时间：1000 小时 Test time :1000 h 试验结束后 24±4 小时后进行测试 Measurement at 24±4 hours after test. 外观：绝缘套管的剥落、剥落、碎裂、起泡或收缩是可以接受的。 Appearance: Peeling, flaking, chipping, bubbling or shrinking of insulation sleeve is acceptable. 容量变化：在初始值±20%范围内 Capacitance change: Within ±20% of the initial value. 损耗角正切值：≤150% 规定值 Dissipation factor: ≤ 150% of specified value ESR：≤150% 规定值 ESR: ≤ 150% of specified value 漏电流：≤规定值 Leakage current: ≤ specified value
端子强度 Terminal Strength	将组件安装在带有待测试设备的 PCB 上，向待测试设备侧面施加 17.7N (1.8kg)的力。应施加此力 60±1 秒。此外，应逐渐施加力，以免对被测部件造成冲击。 With the component mounted on a PCB with the device to be tested, apply a 17.7N (1.8kg) force to the side of a device being tested. This force shall be applied for 60 ± 1 seconds. Also the force shall be applied gradually as not to apply a shock to the component being tested. 外观：无可见机械损伤 Appearance: no visible mechanical damage 电容器应无接触不良开路或短路 The capacitor shall be no intermittent contacts, or open or short circuiting

振动试验 Resistance To Vibration	在 X、Y、Z 三个互相垂直的方向分别进行 12 个循环，共 36 个循环，一个循环 20 分钟。 频率：10-2000Hz 加速度：5g. Perform 12 cycles in X, Y, and Z directions perpendicular to each other, for a total of 36 cycles, each lasting 20 minutes. Vibration frequency range: 10-2000Hz Acceleration: 5g 外观：无可见机械损伤 Appearance: No visible mechanical damage 容量变化：在初始值±3%范围内 Capacitance change: Within ±3% of the initial value. 损耗角正切值：不大于规定值 Dissipation factor: ≤ specified value ESR：不大于规定值 ESR: ≤ specified value 漏电流：不大于规定值 Leakage current: ≤ specified value
机械冲击 Mechanical Shock	脉冲波形：正半弦波；峰值加速度：100g；脉冲持续时间：6ms；三个轴六个向各 3 次，共 18 次，电容器的性能符合下面要求： Waveform: Half-sine, Peak value: 100g, Normal duration: 6ms Three shocks in each direction shall be applied along the three mutually perpendicular axes of the test specimen (18 shocks). Capacitors meet the characteristics listed as below. 外观：无可见机械损伤 Appearance: No visible mechanical damage 电容量变化率:±3%初始测量值以内 Capacitance change: Within ±3% of the initial value. 损耗角正切值≤规定值 Dissipation factor: ≤specified value ESR：不大于规定值 ESR: ≤ specified value 漏电流: ≤规定值 Leakage current:≤ specified value
可燃性 （对绝缘底座进行试验） Flammability (Applicable to components having a resin case)	样品置于纸包松木板上方 200mm 处，用 12mm 针焰，每一试样引燃 3 次，分别引燃 10s、60s、120s。 Place the sample 200 mm above the paper wrapped pine board and ignite it three times with a 12 mm needle flame, respectively for 10 seconds, 60 seconds, and 120 seconds. 要求：第一次施加试验火焰后，试样不应完全燃尽，任一次施加试验火焰后，任何试样的燃烧持续时间应≤15s，薄垫纸应不被引燃，松木板应不被烤焦炭化。 Requirement: After the first application of the test flame, the test specimens shall not be consumed completely. After any application of the test flame, the duration of the burning of any specimen shall not exceed 15s.The tissue paper shall not ignite and the board shall not scorch.

※当产生疑问的时候，用以下电压处理后测试漏电流。

电压处理：125℃下，连续加载电压 120 分钟。加载电压为额定电压。

※Note: If any doubt arises, measure the leakage current after following voltage application treatment.

Voltage application treatment : DC rated voltage are applied to the capacitors for 120 minutes at 125℃.

◆尺寸表、允许纹波电流、纹波电流频率因子

Dimensions and ripple current and frequency coefficient

* 纹波电流频率补正系数

Ripple current frequency coefficient

频率 Frequency(Hz)	120≤频率<1k	1k≤频率<10k	10k≤频率<50k	50k≤频率<100k	100k≤频率<500k
系数 Coefficient	0.1	0.30	0.60	0.85	1.00

* 尺寸表与允许纹波电流

Dimensions and ripple current

Rated voltage 额定电压(V)	Rated capacitance 标称容量(μF)	Case size 尺寸 D×L(mm)	Leakage current 漏电流(μA)	ESR(mΩ) 等效串联电阻 at 20℃,100 kHz	Rated ripple current 额定纹波电流 (mArms/125℃/100kHz)
16(LC)	82	6.3×5.5	13.1	50	882
	150	6.3×7.7	24.0	30	1400
	220	6.3×7.7	45.0	30	1990
	470	10×10.5	75.2	20	2000
25(LD)	150	8×10	37.5	27	1568
	220	8×10.5	55.0	27	1600
	470	10×10.5	117.5	20	2800
	100	6.3×7.7	25.0	30	1400
	330	10×10.5	82.5	20	2000
	680	10×12.7	170.0	16	3942
35(LE)	100	6.3×7.7	35.0	35	1700
	220	8×10	77.0	27	1719
	470	10×16.5	164.5	11	4000
	47	6.3×5.8	16.5	60	900
	150	8×10	52.5	27	1568
	100	8×10.5	35.0	27	1600
	220	10×10.5	77.0	20	2000
	330	10×10.5	115.5	20	2800
	270	10×10.5	94.5	20	2000
	330	10×10.5	115.5	20	2800
	330	10×12	115.5	14	3442

Rated voltage 额定电压(V)	Rated capacitance 标称容量(μF)	Case size 尺寸 D×L(mm)	Leakage current 漏电流(μA)	ESR(mΩ) 等效串联电阻 at 20℃,100 kHz	Rated ripple current 额定纹波电流 (mArms/125℃/100kHz)
35(LE)	47	6.3×5	16.5	60	850
	68	6.3×7.7	23.8	35	1400
50(LF)	22	6.3×5.8	11.0	80	750
	33	6.3×7.7	16.5	40	1100
	47	8×10	23.5	30	1225
	68	8×10	34.0	30	1225
	100	10×10.5	50.0	28	1600
	120	10×10.5	60.0	28	1600
	150	10×12	75.0	17	3146
	220	10×16	110.0	13	3651
	47	10×10.5	23.5	30	1425
63(LG)	33	8×10	20.8	40	1078
	82	10×10.5	51.7	30	1400
	100	10×12	63.0	19	2950
	120	10×12.5	63.0	19	3286
	22	6.3×7	13.9	80	865
	47	8×10	29.6	40	1078
80(LH)	22	8×10.5	17.6	45	1029
	33	10×10.5	26.4	36	1360
	47	10×10.5	37.6	36	1360

◆包装

Packaging

包装标签内容　Package label content

1）客户物料号 P/N　Customer Material P/N
2）风华物料号 P/N　FENGHUA Material P/N
3）批号　Lot number
4）数量　Quantity
5）系列　Series
6）容量偏差　Tolerance on Rated Capacitance
7）规格尺寸　Specification
8）日期　Date
9）RoHS 标识　RoHS
10）二维码　QR code

其中批号的填写　Lot number

1	2	3	4	5	6	7	8	9	10	11	12	13	14
类别 Sort	年份 Year	月份 Month	日期 Date			区别号 Discriminate mark	流传单号码 Sequence number						

* 编带产品按下图包装方式

Taped capacitors are packed into carton, according to the following drawing

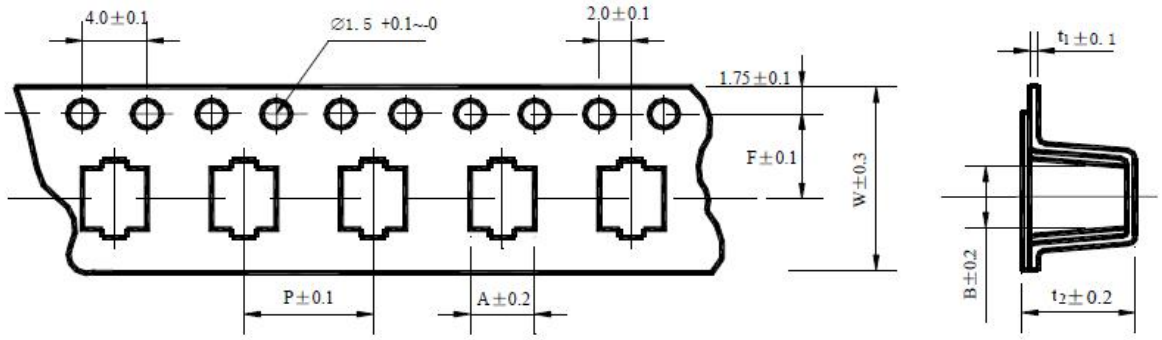

Reel:

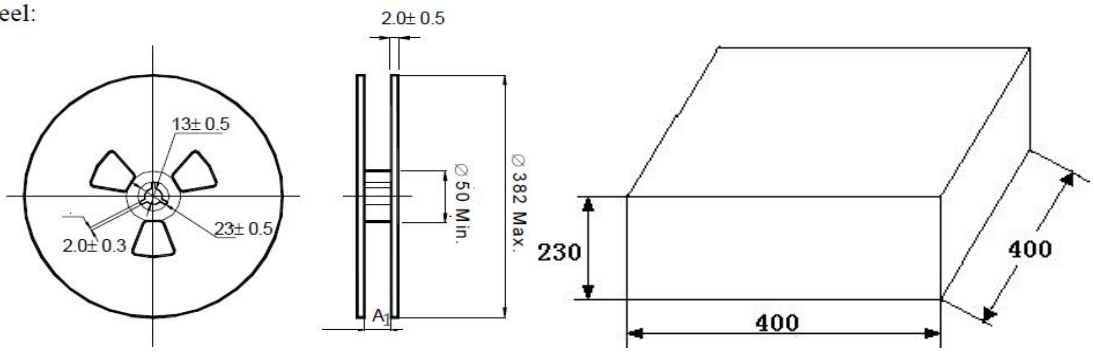

系列 Series	尺寸 Size	W	A	B	P	t_2	F	t_1
HVR	Φ6.3×5.8	16.0	6.9	6.9	12.0	6.2	7.5	0.5
	Φ6.3×7.7	16.0	7.0	7.0	12.0	8.2	7.5	0.5
	Φ8×10.5	24.0	8.7	8.7	16.0	11.0	11.5	0.5
	Φ10×10.5	24.0	10.7	10.7	16.0	11.0	11.5	0.5
	Φ10×12.5	24.0	10.7	10.7	16.0	13.0	11.5	0.5

垂直安装 Vertical Mount		
尺寸 Size	A_1	数量 Quantity/reel
Φ6.3×5.8	18	1000pcs
Φ6.3×7.7	18	1000pcs
Φ8×10.5	26	500pcs
Φ10×10.5	26	500pcs
Φ10×12.5	26	400pcs

◆贮存方法 Storage Methods

* 请保管在室温 5℃～35℃，湿度 75%RH 以下，无阳光直射的环境
* (1)产品储存期限：≤12 个月；
* (2)产品储存期限超 12 个月时，需充电后再使用
* (3)产品储存时间超过 3 年的应报废处理
* (4)库存有效期以套管上印刷的时间开始计算
* (5)请尽量以包装状态保管
* (6)避免在下列环境中保管

① 溅水、高温高湿及结露的环境;

② 溅油、或者充满气体油成分的环境;

③ 充满酸性有毒气体（硫化氢、亚硫酸、亚硝酸、氯、溴、溴化甲烷等) 的环境;

* Store the capacitor in a place where a normal temperature condition (5°C to 35°C) and a normal humidity condition (Less than 75% RH) are maintained and direct sunlight is blocked.

* (1) Storage life: ≤12 months;

* (2) If storage life time is over 12 months, the products need to be recharged;

* (3) If storage life time is over three years, the products need to be discarded;

* (4) Expiry date: calculating from the date marked on the sleeve;

* (5) Please keep capacitors in the original package;

* (6) Avoid storing the capacitors under such circumstances:

①Environment of water splashing, high temperature, high humidity and dewing;

②The environment that splashes oil, or is filled with gas oil;

③With full of acid toxic gases environment such as(hydrogen sulfide , sulfurous acid, nitrous acid, chlorine , bromine, methyl bromide, etc.

◆铝电解电容器使用注意事项

Precautions for using aluminum electrolytic capacitors

* (1)直流铝电解电容器应按正确的极性使用

当直流铝电解电容器被反极性接入电路时，电容器会导致电子线路短路，由此产生的电流会引致电容器损坏。若电路中有可能在负引线施加正极电压，请选用无极性产品

* (2)在额定工作电压以下作用

当电容器上所施加电压高于额定工作电压时，电容器的漏电流将上升，其电气特性将在短时内劣化直至损坏。注意电压峰值请勿超出额定工作电压。虽然规定了超过额定电压的浪涌电压，但有限制条件，不能保证长时间使用

* (3)常规产品禁止作快速充放电使用

当常规电容器被用作快速充电用途。其使用寿命可能会因为容量下降，温度急剧上升等而缩减。

* (4)施加纹波电流应小于额定值

施加纹波电流超过额定值后，会导致电容器体过热，容量下降，寿命缩短。所施加纹波电压的峰值应小于额定工作电压。

* (5)使用温度

请不要在高温(超过工作上限温度的温度)下使用。如果超过工作上限温度使用，电容器的寿命会缩短，并导致压力阀动作等破损。不仅限于环境温度及机器内的温度，请确认机器内的发热体(晶体管、电阻等)的辐射热、包括纹波电流自身发热等在内的电容温度。另外，请不要在电容的背面配置发热体等。此外，电容的寿命受使用温度的影响，所以请在工作上限温度内使用。如果将温度设定的较低，寿命会延长。

* (6)引出线强度

当拉力施加到电容器引出线，该拉力将作用于电容器内部，这将导致电容器内部短路，开路或漏电流上升。在电容器焊装到电路板，请勿强烈摇动电容器。

* (7)焊接过程耐热性

铝电解电容器装至电路板进行浸焊或波峰焊时，其塑料套管可能因焊接时间过长、温度过高而发生破裂或二次收缩。

* (8)电路板的安装孔距及安装位置

电路板安装孔的设计应与产品说明书的引线脚距一致，如果将电容器强行插入孔距不配套的电路板，那么会有应力作用于引出线，这将导致短路或漏电流上升。

* (9)铝电解电容可能会有残留电压，请在使用前对电容器进行放电。

(1) DC aluminum electrolytic capacitors should be used according to the correct polarity

When a DC aluminum electrolytic capacitor is connected to a circuit with reverse polarity, the capacitor will cause a short circuit in the electronic circuit, and the resulting current will cause damage to the capacitor. If it is possible to apply positive voltage to the negative lead in the circuit, please choose a non-polar product.

(2) Function below rated operating voltage

When capacitor is used at higher voltage than the rated voltage, leakage current increases, characteristics drastically deteriorate and damage in a short period may occur as a result. Please take extra caution that the peak voltage should not exceed the rated voltage. Although capacitors specify a surge voltage that exceeds thefull rated voltage, it does not assure long-term use but limited use under specific conditions.

(3) Conventional capacitors are prohibited from being used for fast charging and discharging

When aluminum electrolytic capacitors for general purpose are employed in rapid charge and discharge application, its life may be shorted by capacitance decreasing, heat rising, etc.

(4) The applied ripple current should be less than the rated value

Excessive heat will reduce capacitance and result in shortened life of capacitor if ripple currents exceeding the specified rated value are applied. The peak value of the ripple voltage should be less than the rated voltage.

(5) Operating temperature

Do not apply high temperatures that exceed the upper limit of the category temperature range specified for the capacitors. Using the capacitors at temperatures higher than the upper limit will considerably shorten the lifetime of the capacitors and make the pressure relief vent open. The temperature, please confirm the temperature of the capacitors which included the ambient temperature of the device, not only the temperature in the device but also radiant heat of the heating element (power transistor, resistance) in the apparatus, self-heating caused by the ripple current. Additionally, please do not place heating element on the back side of the capacitors. In addition, please use the capacitors within category temperature range because the life of the capacitors are affected by the operating temperature. In other words, lowering ambient temperatures will extend the expected lifetime of the capacitors.

(6) Terminal Strength

When a strong force is applied to the lead wires or terminals, stress is put on the internal connections. This may result in short circuit, open circuit or increased leakage current. It is not advisable to bend or handle a capacitor after it has been soldered to the PCB board.

(7) Heat resistance during welding process

In the dip soldering process of PCB board with aluminum electrolytic capacitors mounted, secondary shrinkage or crack of PVC sleeve may be observed when solder temperature is too high or dipping time is too long.

(8) Installation pitch-row and installation position of circuit boards

PCB board must be designed so its hole coincides with the lead pitch (lead spacing) of the capacitor specified by the catalog or specifications. When a capacitor is forcibly inserted into an unmatched hole, a stress is put on the leads. This could result in a short circuit or increased leakage current.

(9) Aluminum electrolytic capacitors may have residual voltage, please discharge the capacitor before use.

◆推荐安装/焊接方法 Recommended Installation/Welding Methods

（1）焊接方法之适用性

焊接方法	回流焊	铬铁	波峰焊
可行性	可行	可行	不可行

（2）无铅回流焊使用条件

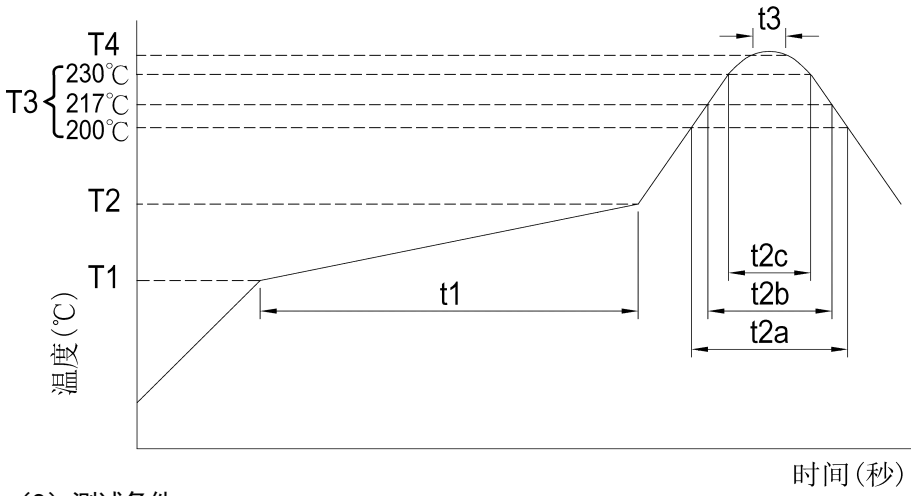

（3）测试条件

制品别		非固态电容器							高分子固态电容器		高分子固液混合电容器		
额定电压(V)		4 ~ 50	4 ~ 50		≧ 63	4 ~ 100		≧ 160	---		---		
制品尺寸(φ)		4 ~ 6.3φ × 4.5L	4 ~ 6.3		4 ~ 6.3	8 ~ 18		≧ 12.5	---		---		
预热	温度 (T1 ~ T2, ℃)	150 ~ 180							150 ~ 200		150 ~ 180		
	时间(t1) (最大，秒)	120	180						180		120		
持续时间	温度 (T3，℃)	230	217	230	217	217	230	217	217	230	200	217	280
	时间(t2)	t2c	t2b	t2c	t2b	t2b	t2c	t2b	t2b	t2c	t2a	t2b	t2c
	(最大，秒)	30	90	60	60	60	30	90	70	60	70	50	40
最高温度	温度 (T4，℃)	250	260*		250	250		240	250	260	250		260
	时间 (t3，秒)	5							5		5		
回流次数		1	≦2						2	1	2		1

① 如使用条件较上表所列为高时，请与我们联系。

② 在执行第 2 次回流焊时，请确认电容器之温度已冷却至 5 ~ 35℃。

（4）OP-CAP 回流焊注意事项

回流焊会降低制品额定静电容量，应确认回流焊条件是否满足建议回流焊之规范。

虽然实际的回流焊条件变更仍依据回各项回流焊焊接方法，请注意制品铝壳底部之最高温度及电极端子不可超过最高温度。

请特别注意：OP-CAP 制品在回流焊加热过程之温度应提高至 200℃以上。

若回流焊条件(温度或持续时间)大于上表所列，则 OP-CAP 制品会受损：制品静电容量降低约 50%、漏电流变大(上升至数毫安/mA)，以及损坏电容器外部。

◆ 其它说明 OTHERS

*本产品不含铅、镉等元素

This product does not include Plumbum or Cadmium.

■修订履历

版本	日期	修订内容	修订人
QWH-25.001	2025 年 6 月 02 日	新版发布	廖腊梅
QWH-26.001	2026 年 8 月 28 日	增删部分规格	徐蕾蕾

注：上述所提供之内容为产品规格说明。在产品未变更时，风华保有修改此内容不另行通知之所有权利，任何产品变更将会以 P C N 通知客户。